DO NOT SCALE | DIMENSIONS IN mm | METRIC | THIRD ANGLE PROJECTION

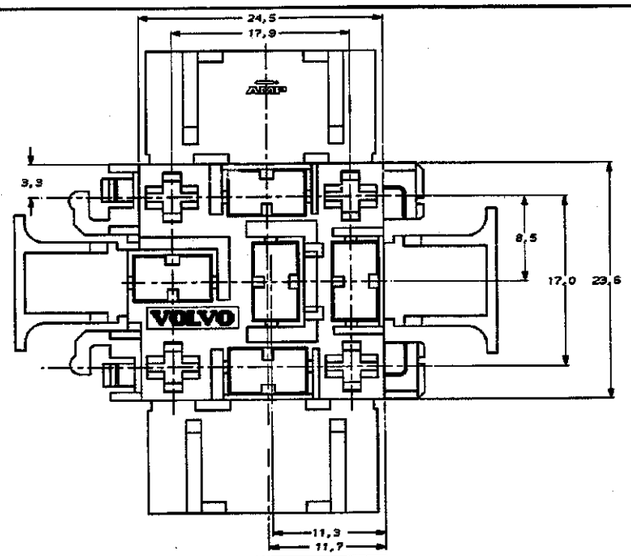

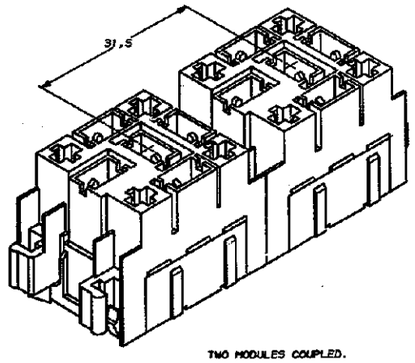

TWO MODULES COUPLED.

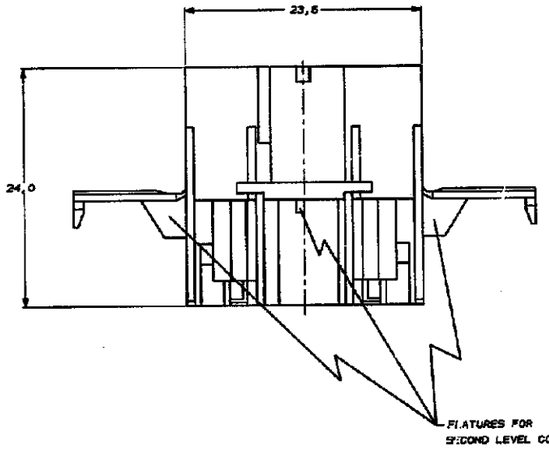

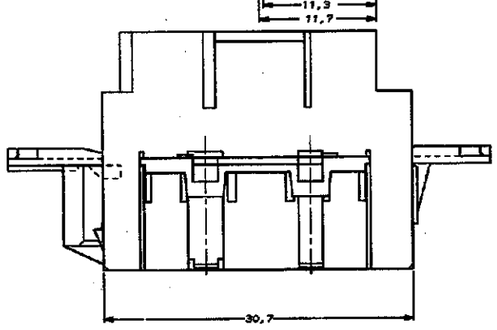

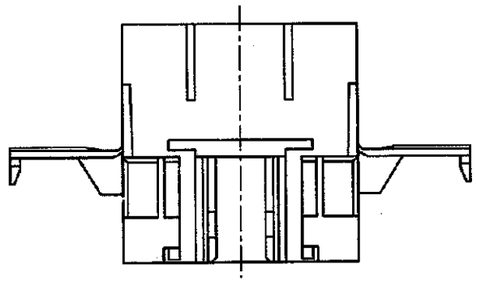

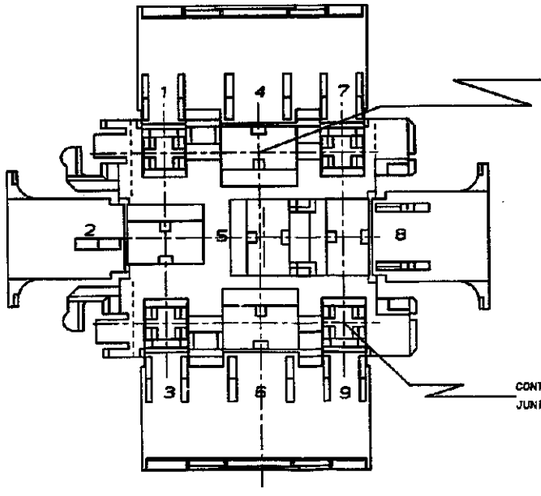

DOC. CENTRE
13 SEP. 1991

BLACK	PA-6	215754-3
YELLOW	PA-6	215754-4
RED	PA-6	215754-1
NATURAL	PA-6	215754-0
COLOUR	MATERIAL	PARTNUMBER

LTR.	REVISION RECORD	DR.	CHK.	DATE
D	H-9069	P.B.	A.S.	07/05/91

CUSTOMER DRAWING — FOR REFERENCE ONLY WILL NOT BE UPDATED

© COPYRIGHT 19- BY AMP-HOLLAND B.V.
ALL INTERNATIONAL RIGHTS RESERVED. AMP PRODUCTS MAY BE COVERED BY U.S. AND FOREIGN AND/OR PATENTS PENDING.
THIS DRAWING IS UNPUBLISHED

AMP — AMP-HOLLAND B.V. 's-Hertogenbosch, The Netherlands

NAME: 9 POS. RELAYS MODULE

DRN. J. KLEEBERG DATE: 04-08-87 | CHK. J. SCHEEPERS DATE: 04-08-87 | APP. L. H. BOEST DATE: 7-07-91

CODE NO. C-215754 | REV. LTR. D | SHEET 1 of 1 | A1

NOT THE LAST REVISION