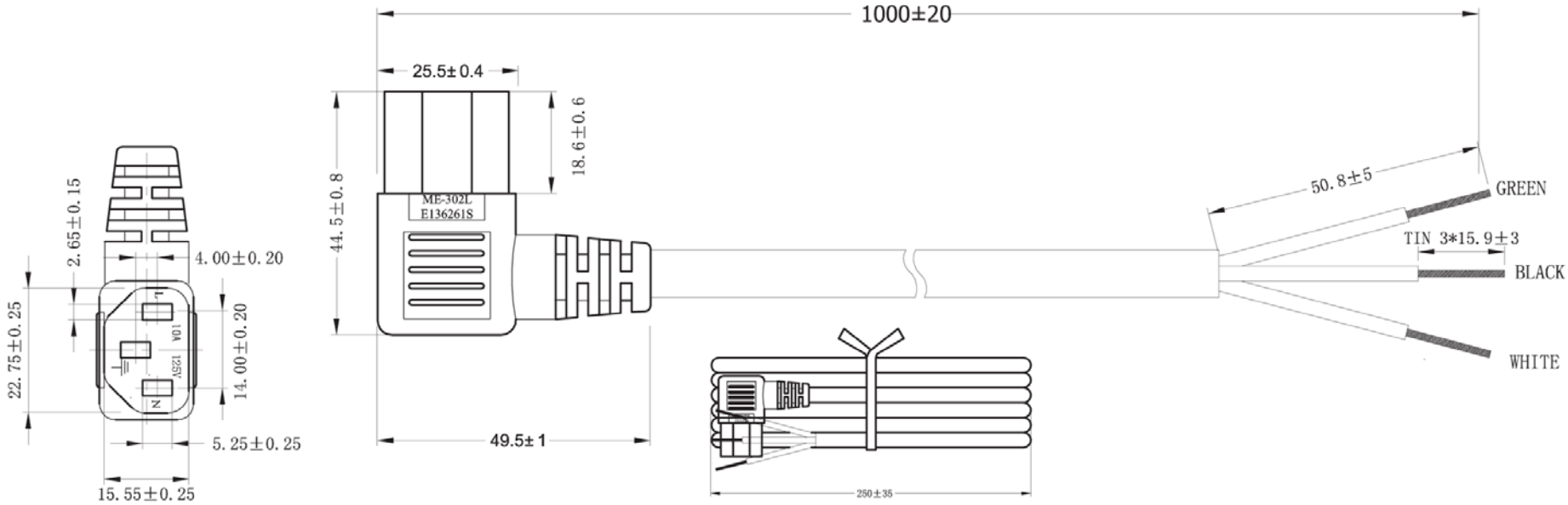

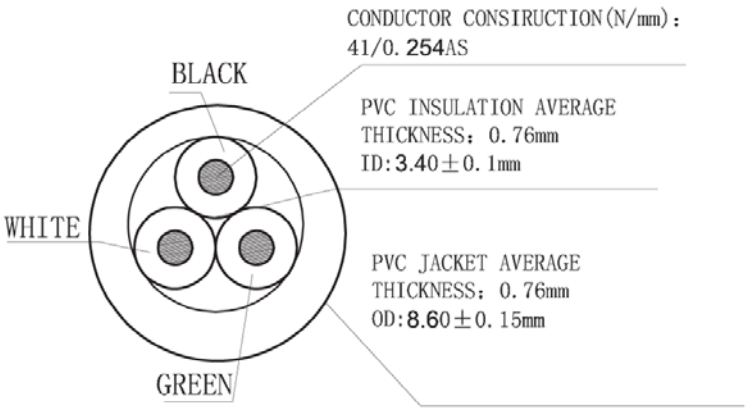

Material:

- E243929(UL) SJT 3 x 16AWG(1.31MM²)
  VW-1, 60°C 300V
  - CSA 228191 SJT 3 x 16AWG(1.31MM²)
  FT2 60°C 300V -LF-
- Jacket Color: Black
- E - Green; L - Black; N - White

Electrical:

- 100% Open & Short Testing
- Insulation Resistance: 100MΩ (Min.)
- Voltage: 500V DC / 1 Min.

Unit: MM

RoHS Complaint

Scale	1:1						Name	Item No. AK500/16-RA-6-1
TOLERANCE						Drawn	12.27.11	Chappell
X.X	±0.40					Approved		Title Power Cord - SJT, 60°C, Right Angle/Open End, 16AWG, 1 Meter
X.XX	±0.25							
X.XXX	±0.15							Drawing No. rev00
Angle	±3°							
			Modification	Date	Name			Replace / Sheet

ASSMANN WSW components