THIS DRAWING IS UNPUBLISHED. RELEASED FOR PUBLICATION 2008
© COPYRIGHT 2008 BY TYCO ELECTRONICS CORPORATION. ALL RIGHTS RESERVED.

LOC	DIST
A1	–

REVISIONS

P	LTR	DESCRIPTION	DATE	DWN	APVD
	A	–	10SEP2008	–	–

ERGOCRIMP DIE SET FOR MCON 2.8 TERMINALS SWS – 4,0 mm²

Ergocrimp Matrize als Ersatzteil erhaeltlich
TE P/N 8-1579022-6
Ergocrimp die set as spare part available
TE P/N 8-1579022-6

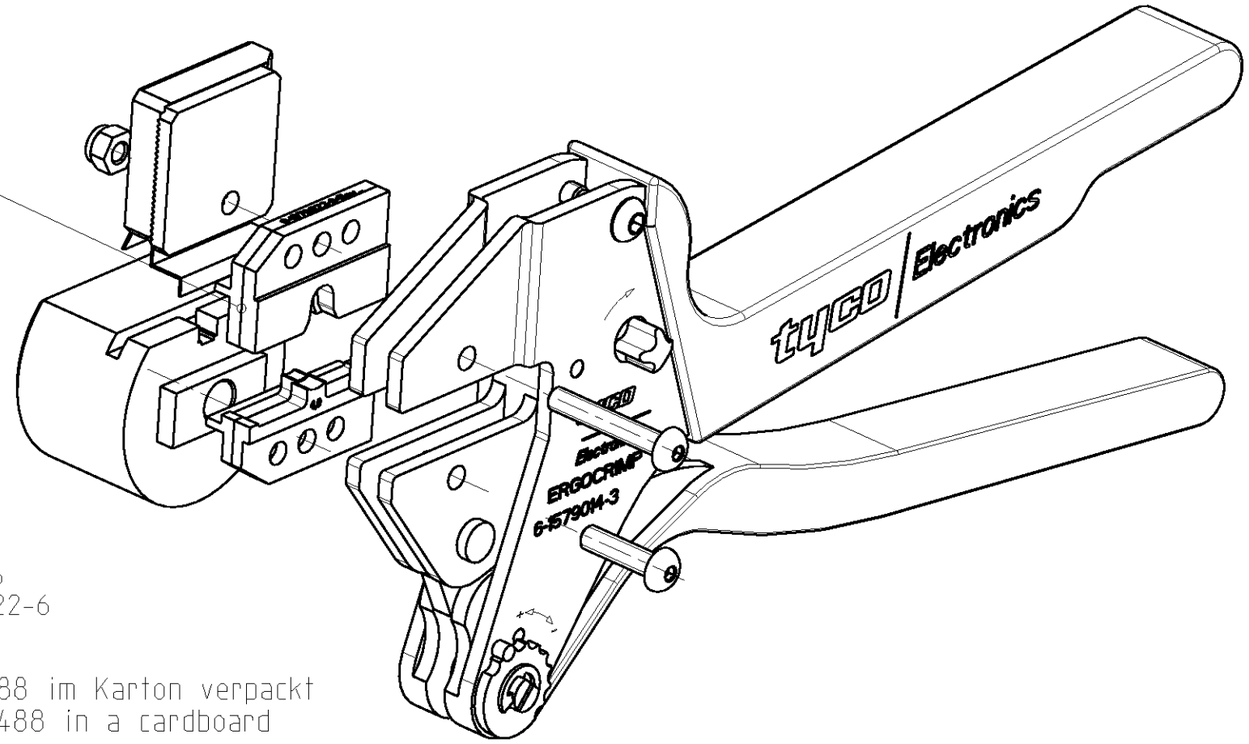

Einzelzeile der Ergocrimp Matrize bestellbar. Siehe Zeichnung TE P/N 8-1579022-6
Spare parts of the Ergocrimp die set are available. See drawing TE P/N 8-1579022-6

Handzange mit Matrize zusammengebaut und mit Bedienungsanleitung 411-18488 im Karton verpackt
Hand tool assembled with die set and packed with instruction sheet 411-18488 in a cardboard

Kontakt	DGB (mm²)	Drahtcrimp / Wide Crimp		Isolationscrimp/Insulationcrimp		Isol.∅	Betriebsanl.
Contact	Wire Range	Hoehe/Height mm	Breite/Width mm	Hoehe/Height mm	Breite/Width mm	Ins.Range	Instr.Sheet
1670807	4,0	2,10 ±0,05	3,05 F	5,3	5,34 O	3,4-3,7	411-18488

THIS DRAWING IS A CONTROLLED DOCUMENT FOR TYCO ELECTRONICS CORPORATION. IT IS SUBJECT TO CHANGE AND THE CONTROLLING ENGINEERING ORGANIZATION SHOULD BE CONTACTED FOR THE LATEST REVISION.

DIMENSIONS: mm

TOLERANCES UNLESS OTHERWISE SPECIFIED:
0 PLC ±–
1 PLC ±–
2 PLC ±–
3 PLC ±–
4 PLC ±–
ANGLES ±1°

MATERIAL –
FINISH –

DWN Ch.Witt 10SEP2008
CHK –
APVD –
PRODUCT SPEC –
APPLICATION SPEC –
WEIGHT 750 g

tyco Electronics
tyco Electronics AMP GmbH
D - 64625 Bensheim

NAME
ERGOCRIMP HAND TOOL FOR
MCON 2.8 TERMINAL SWS – 4,0 mm²
–

SIZE	CAGE CODE	DRAWING NO	RESTRICTED TO
A3	00779	C-6-1579014-3	–

CUSTOMER DRAWING | SCALE 1:1 | SHEET 1 OF 1 | REV A

AMP 1470-19 REV 31MAR2000

Pro/ENGINEER DRAWING