THIS DOCUMENT IS THE PROPERTY OF KEYSTONE ELECTRONICS CORP. AND SHALL NOT BE REPRODUCED, DISTRIBUTED OR USED AS A BASIS FOR MANUFACTURE WITHOUT PRIOR WRITTEN PERMISSION FROM KEYSTONE ELECTRONICS CORP.

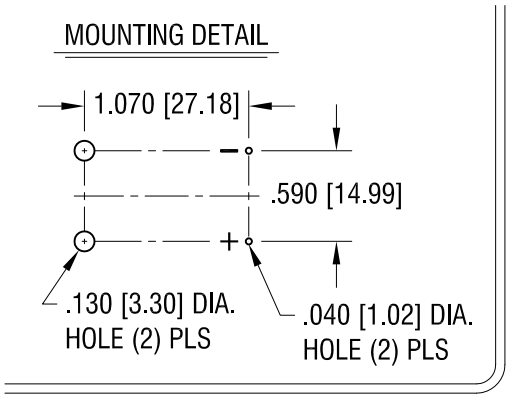

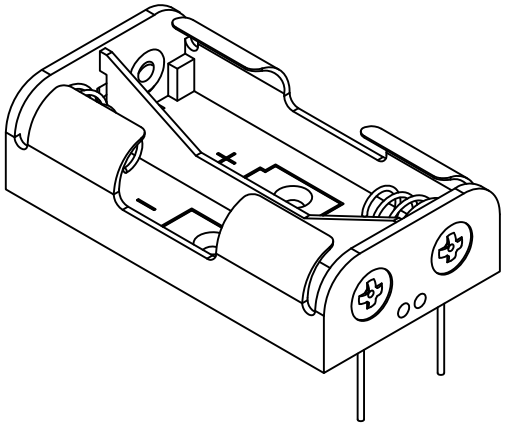

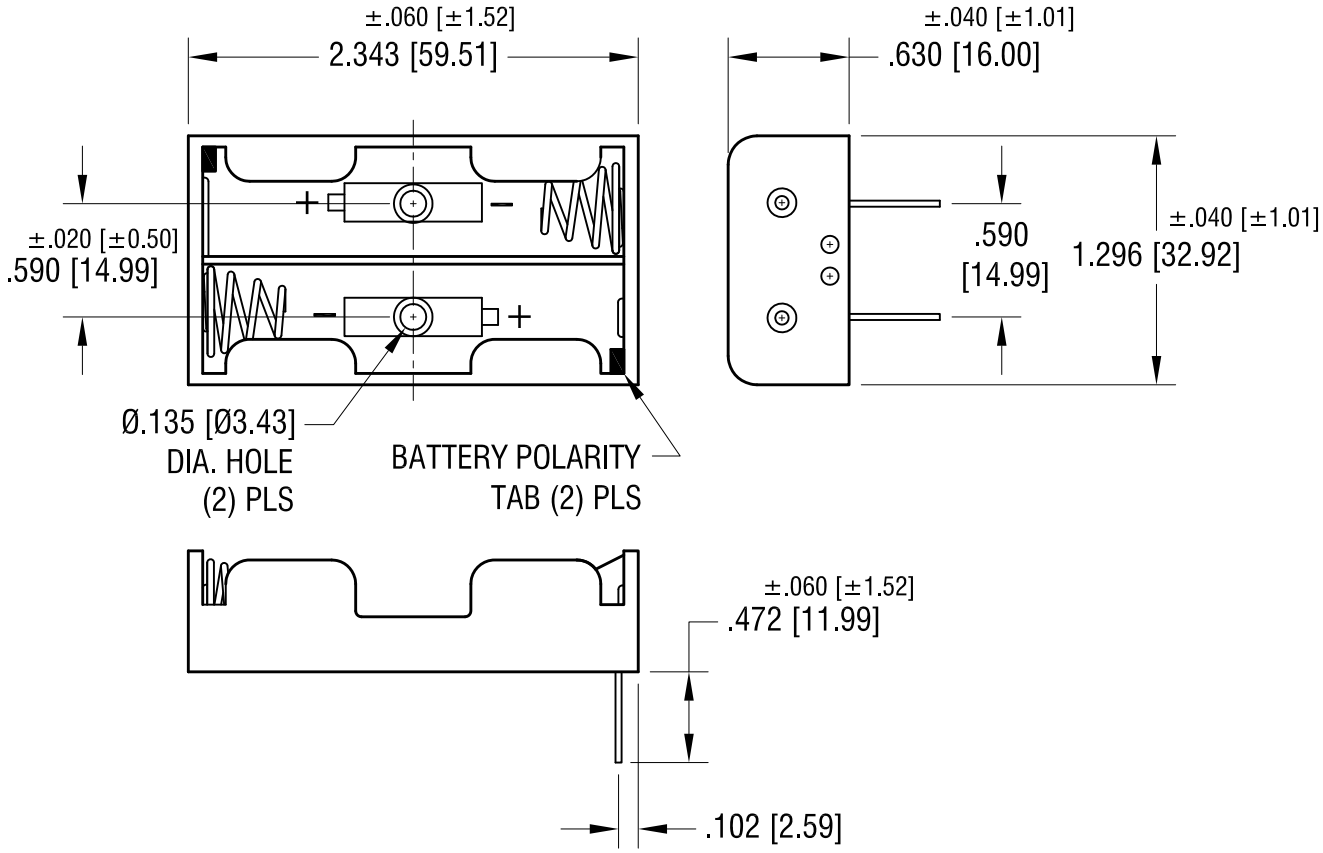

NOTE:

1. HOLDER: MAT'L: POLYPROPYLENE
   SPRING: MAT'L: MUSIC WIRE, .025 [0.63] DIA.
   PC TERMINALS: MAT'L: BRASS, .032 [0.81] DIA.

DATE	DESCRIPTION	REV.
7.24.12	CHANGE AS PER ECN 12–094	G
11.10.11	CHANGE AS PER ECN 11–153	F
6.12.09	CHANGE AS PER ECN 09–066	E
5.2.06	CHANGE AS PER ECN 06–025	D

KEYSTONE ELECTRONICS CORP.

www.keyelco.com • ASTORIA, N.Y. 11105-2017 • Tel (718) 956-8900

PART NAME	PC BATTERY HOLDER (2) 'AA'		
MATERIAL	AS NOTED		
FINISH	NICKEL PLATE	DRN BY BOONE	DATE 10.11.95
		APP'D LN	SCALE 1X
TOLERANCES INCH [MM] DECIMAL ± .010 [± 0.25] ANGULAR ± 1° UNLESS OTHERWISE SPECIFIED	CODE C	DWG NO. 2462	