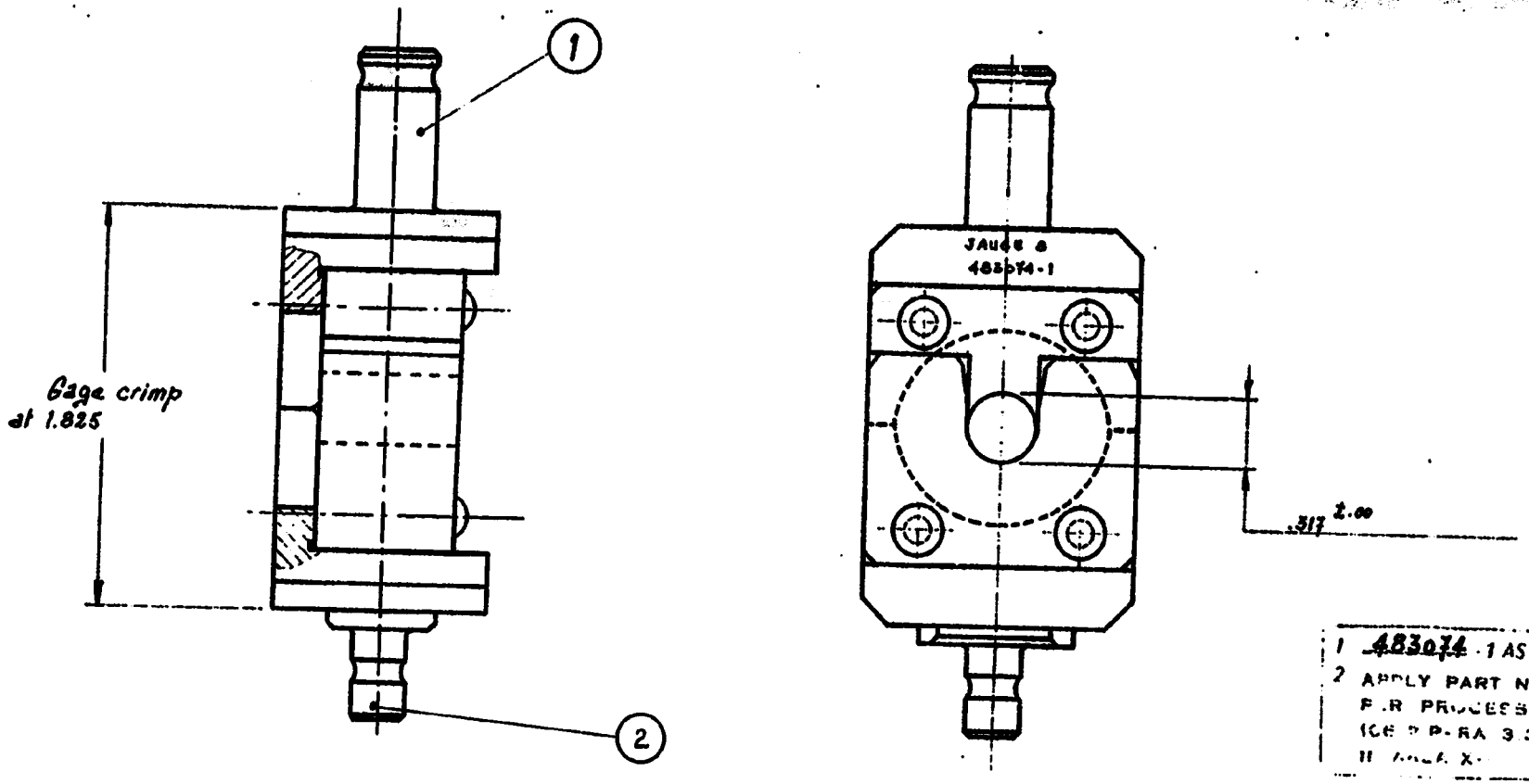

1 483074-1 AS S...
2 APPLY PART NUMBER
FOR PROCESS SPEC
ICE 9 P-RA 3 3-A
II ANLA X-

PART LIST

ITEM	P/N	SIZE	NAME	NUMBER
5				
4				
3				
2	483082	B	Die assembly lower	1
1	483078	B	Die assembly upper	1

REVISION RECORD			
A	ECR-07-028567	LS	11/07

UNLESS OTHERWISE SPECIFIED: REMOVE BURRS BREAK SHARP EDGES .010 R MAX; DIMENSIONS .00=±.02 .000=±.005 .0000=±.0005; ANGLES ± 0°30

MATERIAL —
HEAT TREAT —
COATING OF PLATING —

DR 09.XII.77
CHK
APP
DEL

Tyco Electronics
Tyco Electronics AMP GmbH
64625 Bensheim (Germany)

TERMINAL #8
HOST USED 68061
LOC F
NO C- 483 074
REV A

DIE ASSEMBLY
Crimper, Unterbaugruppe

SHEET 1 OF 1

DIFFUSION N°