Copyright FCI.

FCIconnect.com

PRODUCT NUMBER	PITCH
YNxx21x000J0G	5.08 mm

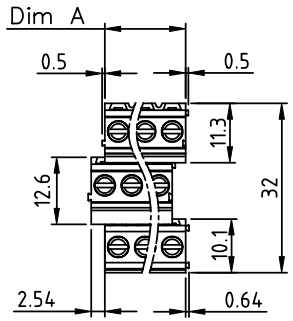

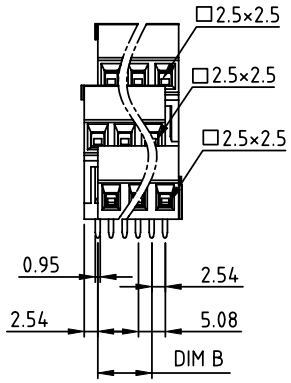

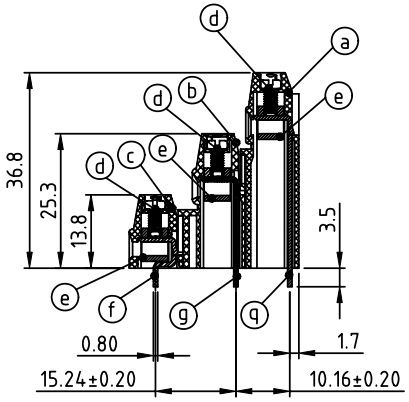

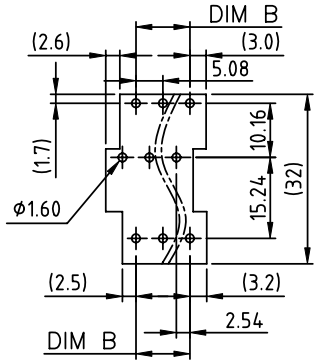

RECOMMENDED P.C.B LAYOUT
TOP VIEW

Material:

- Item ⓐ Terminal housing : Thermoplastic (UL 94V-0)(YF5.0)
- Item ⓑ Terminal housing : Thermoplastic (UL 94V-0)(YE5.0)
- Item ⓒ Terminal housing : Thermoplastic (UL 94V-0)(YD5.0)
- Item ⓓ Terminal screw: Steel Zinc plating"-"slot type
- Item ⓔ Clamp : Brass ,Ni plated
- Item ⓕ Solder pin1 : Brass ,Tin plated
- Item ⓖ Solder pin2 : Brass ,Tin plated
- Item ⓠ Solder pin3 : Brass ,Tin plated

Electrical cULus

- Voltage rating: 300VAC
- Current rating: 10A
- Wire range:
- Solid wire(AWG): 12-24
- Stranded wire(AWG): 12-24
- Torque(Lb-In): 3.5
- Screw: M2.5
- Wire strip length: 6-7mm
- Withstanding Voltage: 1.6KV
- Operating temperature: -40°C to +115°C
- Soldering temperature: 260°C±10°C/5 Sec
- Safety Approval: c UL us

PART NO.: YN xx 21 x 0 00J0 G

End stackable
No. of poles
06 3×2poles
09 3×3poles
... ...
72 3×24poles

Color
0 Black (RAL9005)
2 Red (RAL3001/D)
3 Orange(RAL2011/P)
4 Yellow(RAL1018/A)
5 Green(RAL6018/T)
6 Blue (RAL5015/A)
8 Grey(RAL7035/D)
9 White(RAL1102)
C Green(RAL6018/U)

RoHS compliant
(lead<4%)
In copper Alloy

Dimension A&B

DIM A	N/3×5.08
DIM B	(N/3-1)×5.08

N=Number of poles

Poles	DimA&B Tolerance
3×2P-3×6P	±0.20
3×7P-3×12P	±0.30
3×13P-3×18P	±0.35
3×19P-3×24P	±0.40

mat'l. code				surface ASME Y14.5	tolerance ASME Y14.5	projection	product family TERMINAL BLOCK
ltr	ecn no	dr	date	tolerances unless otherwise specified			title
				angles	linear X.±0.5 / X.X±0.3 / X.XX±0.1	MM	TERMINAL BLOCK
				X°±1°		scale	RISING CLAMP,180D WIRE INLET,END STACKABLE
				dr	EVIN ZHONG 041114	FCI	dwg no YNxx21x000J0G sheet 1 of 1 size A4
				engr	EVIN ZHONG 041114		
				chr	HANKE FENG 041114		
				appd	SHI JUN 041114		type CUSTOMER Drawing
sheet index	revision	A					
	sheet	1					